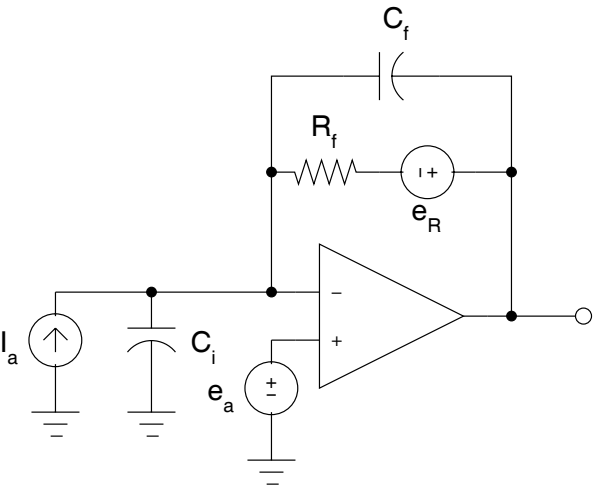
C_f
R_f
e_R
I_a
C_i
e_a

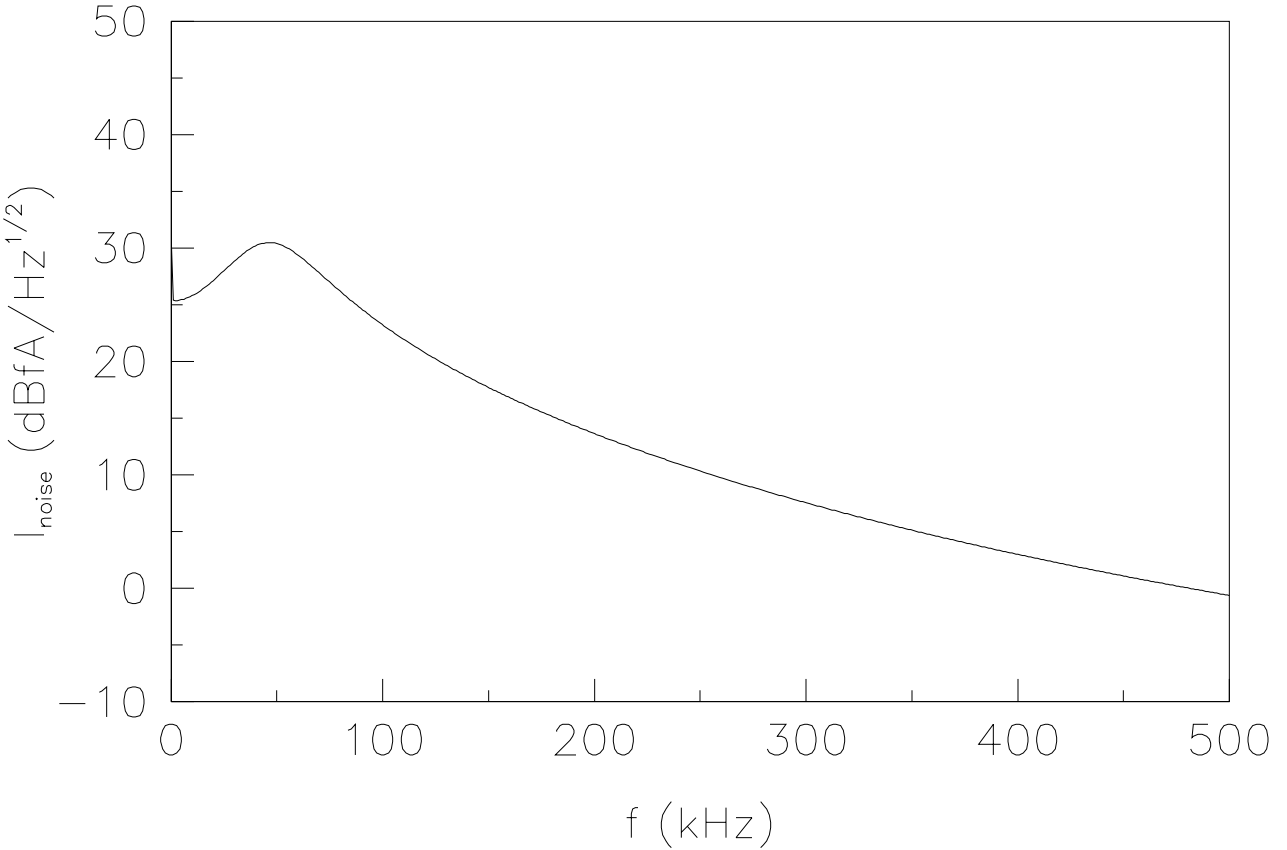
50
40
30
20
10
0
−10
0
100
200
300
400
500
I_{noise} (dBfA/Hz$^{1/2}$)
f (kHz)

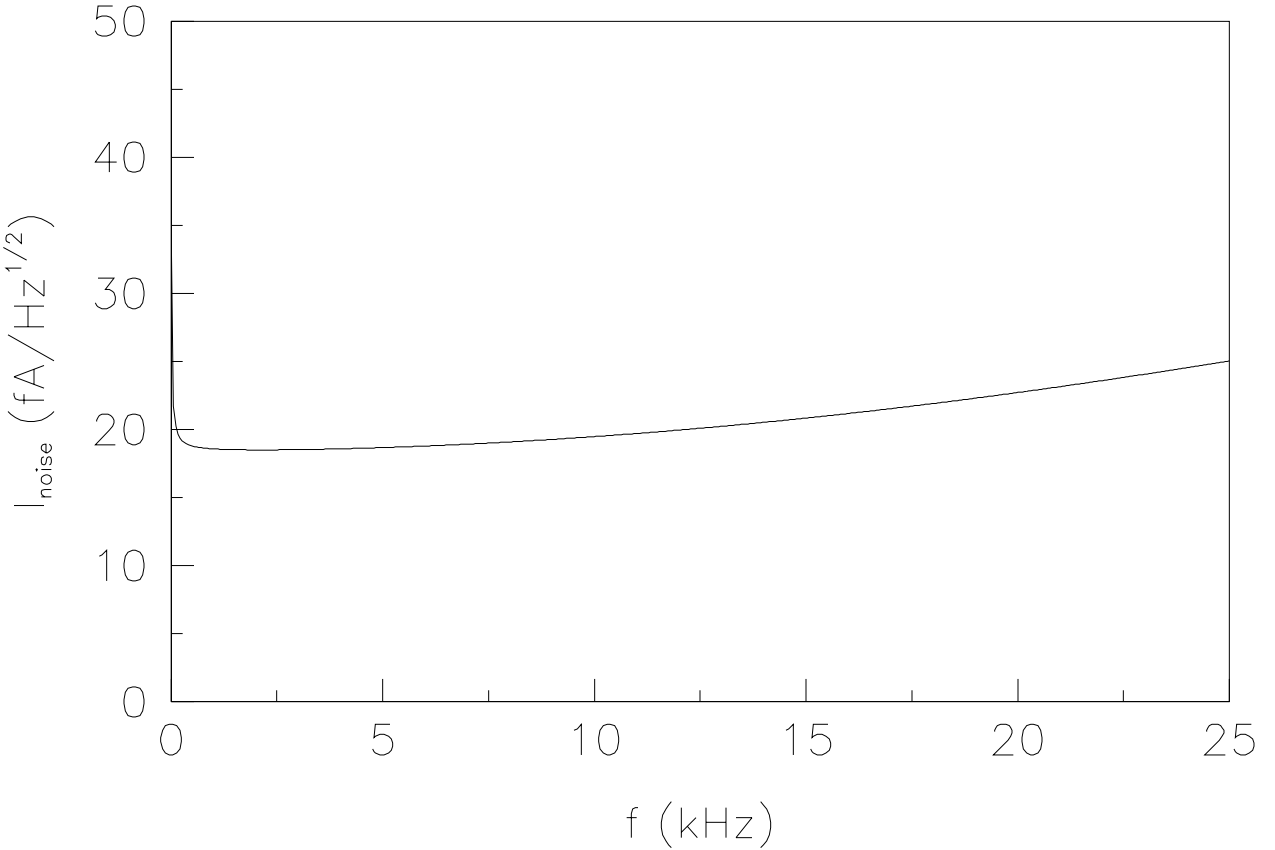
50
40
30
20
10
0
I_{noise} (fA/Hz$^{1/2}$)
0
5
10
15
20
25
f (kHz)

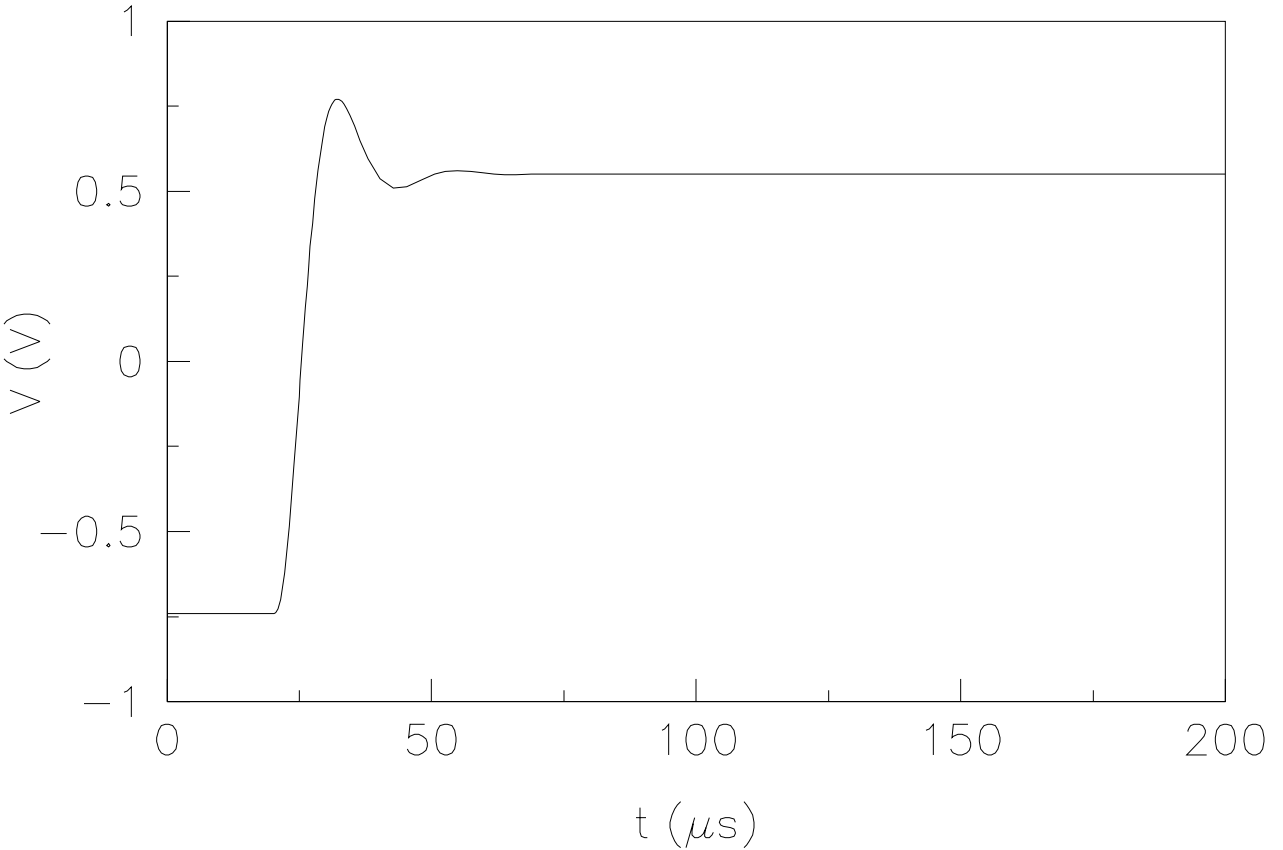
1
0.5
0
−0.5
−1
V (V)
0
50
100
150
200
t (μs)

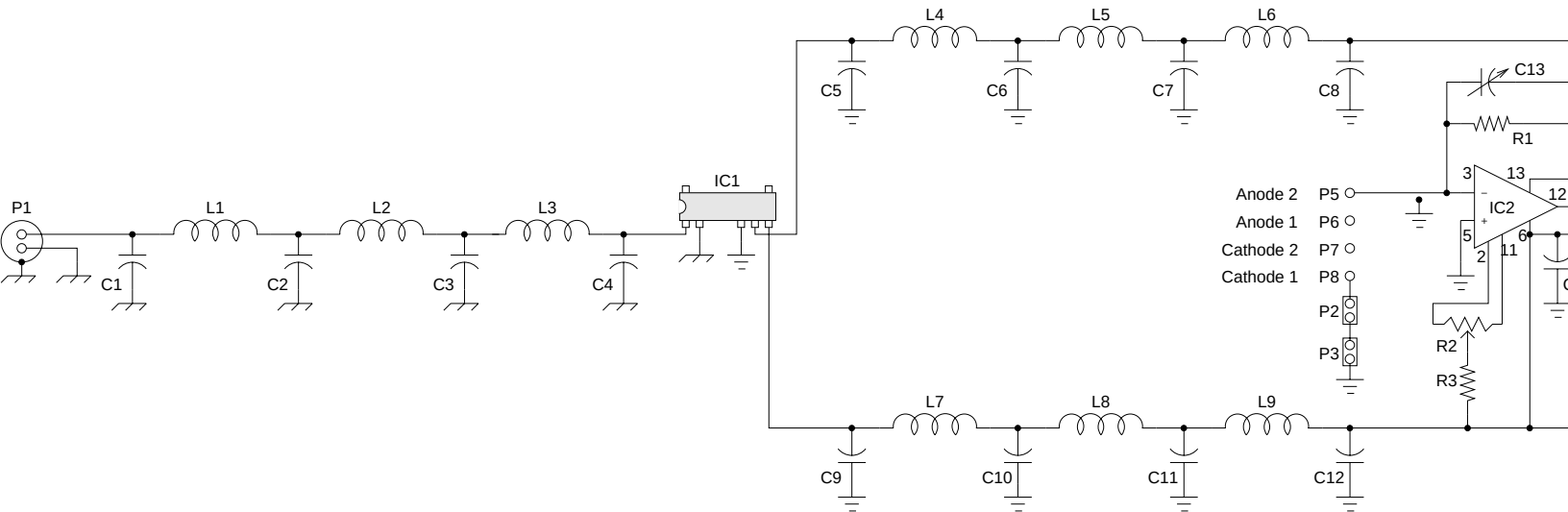
P1
L1
L2
L3
C1
C2
C3
C4
IC1
L4
L5
L6
C5
C6
C7
C8
C13
R1
Anode 2
Anode 1
Cathode 2
Cathode 1
P5
P6
P7
P8
P2
P3
IC2
3
13
12
5
2
6
11
R2
R3
L7
L8
L9
C9
C10
C11
C12

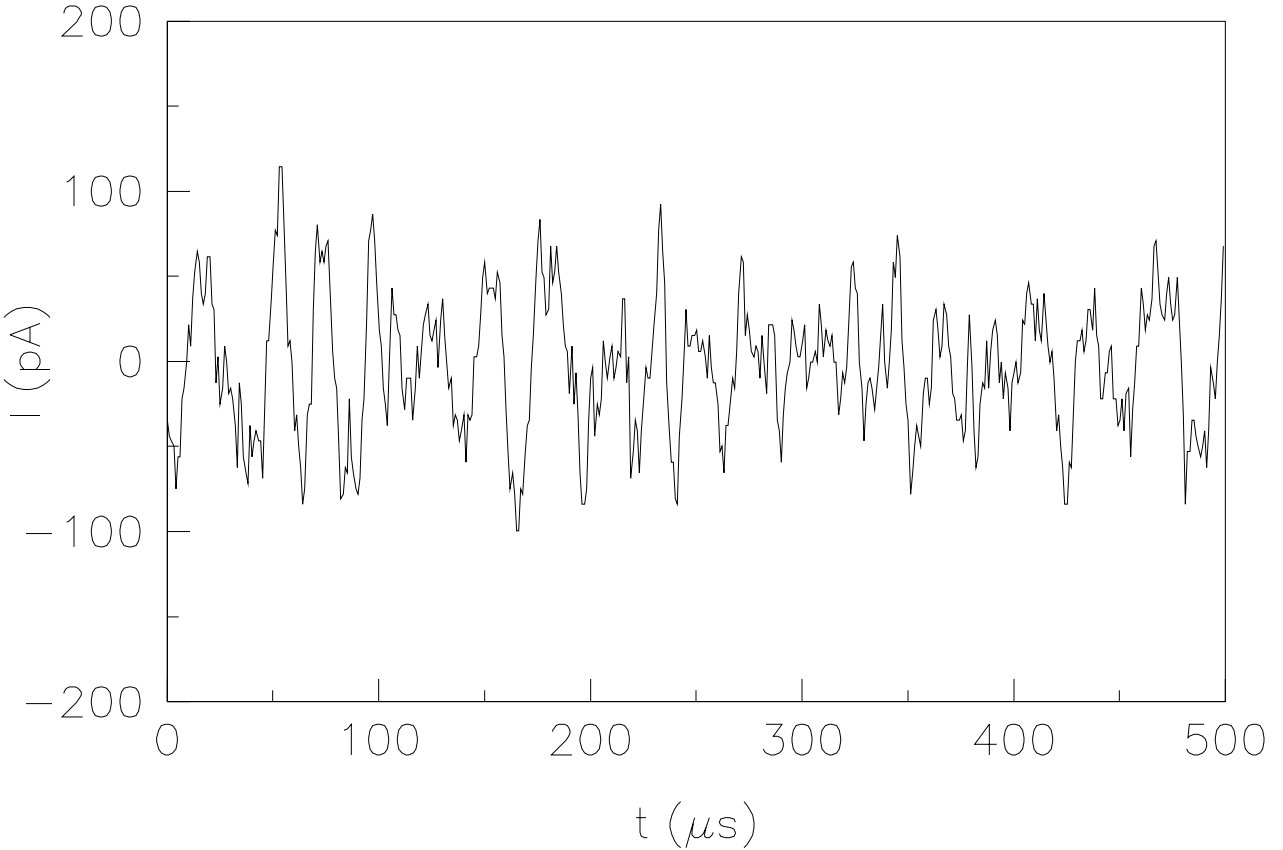
200
100
0
−100
−200
I (pA)
0
100
200
300
400
500
t (μs)

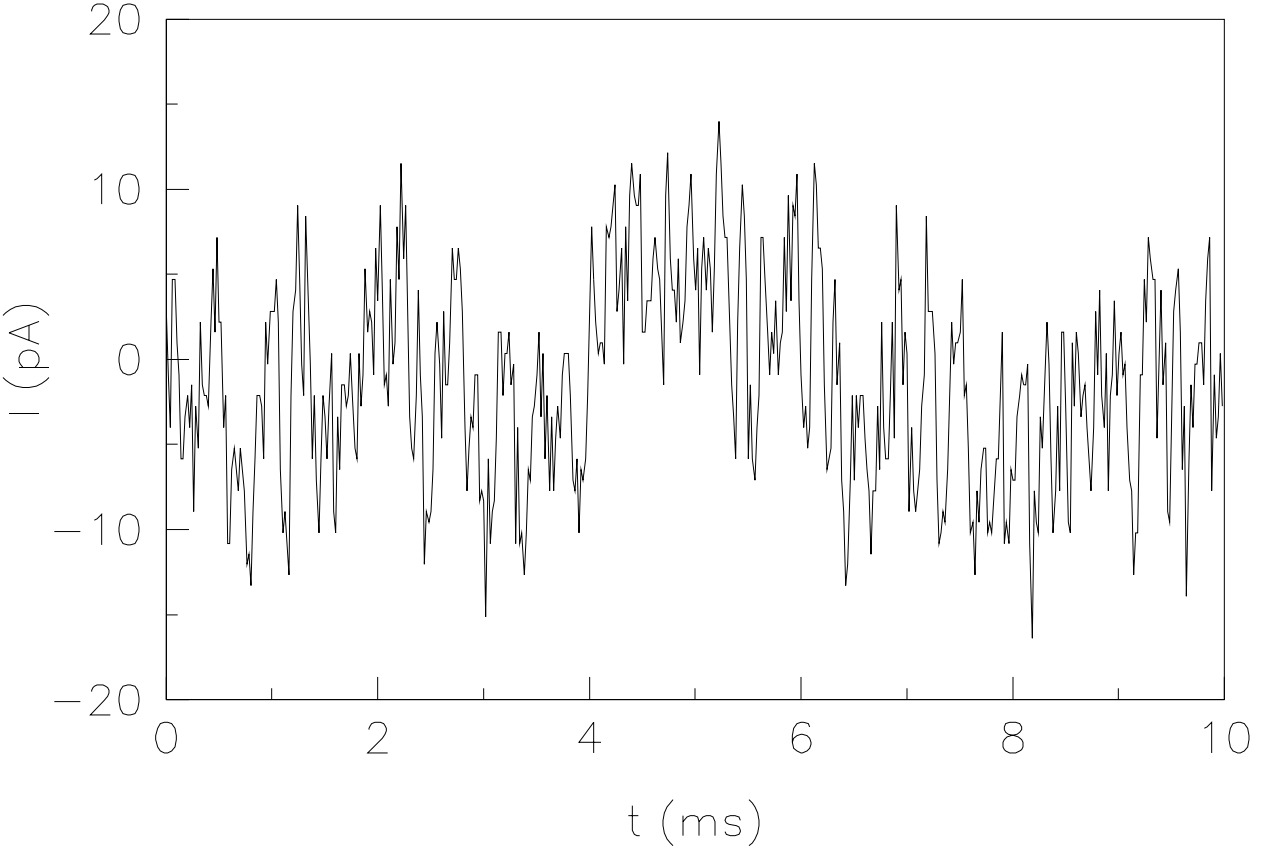
20
10
0
−10
−20
I (pA)
0
2
4
6
8
10
t (ms)

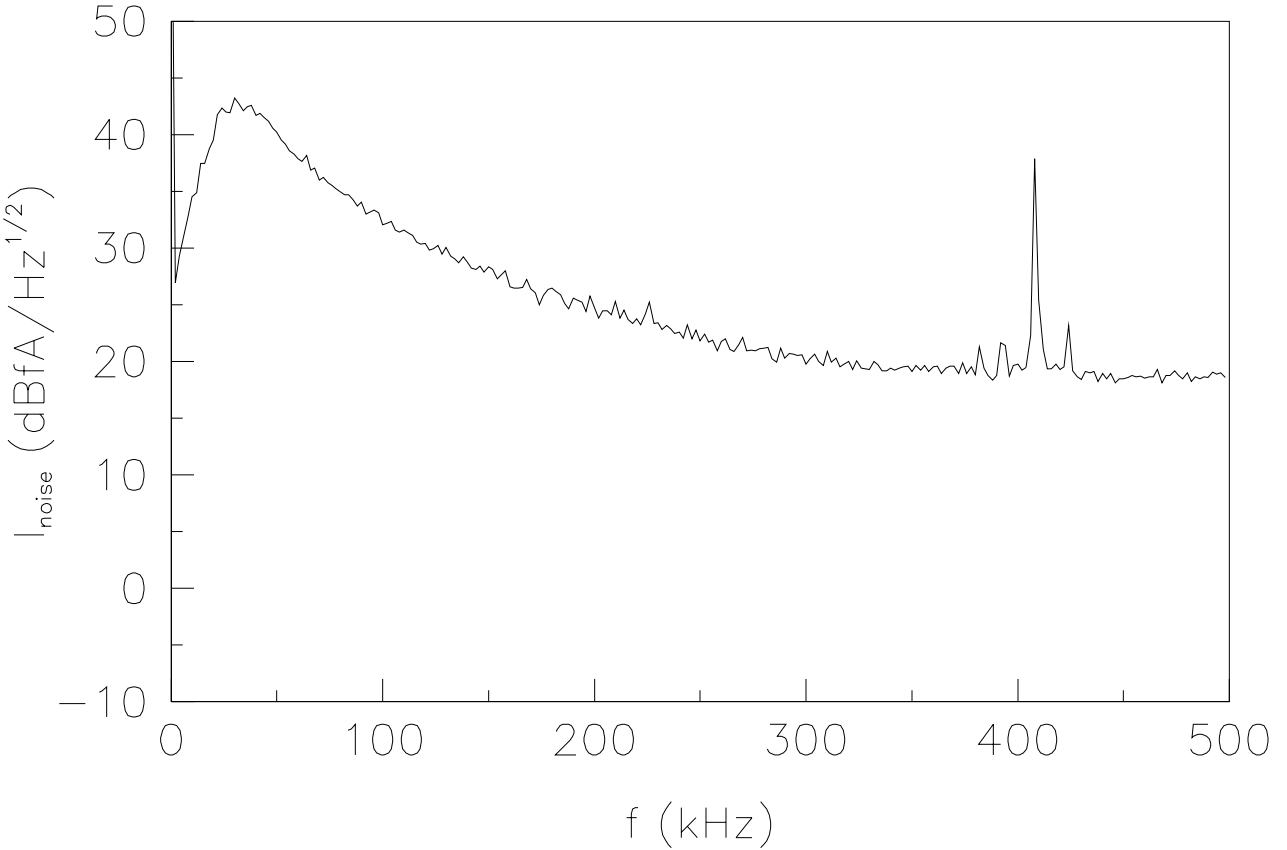
50
40
30
20
10
0
−10
0
100
200
300
400
500
I_{noise} (dBfA/Hz$^{1/2}$)
f (kHz)

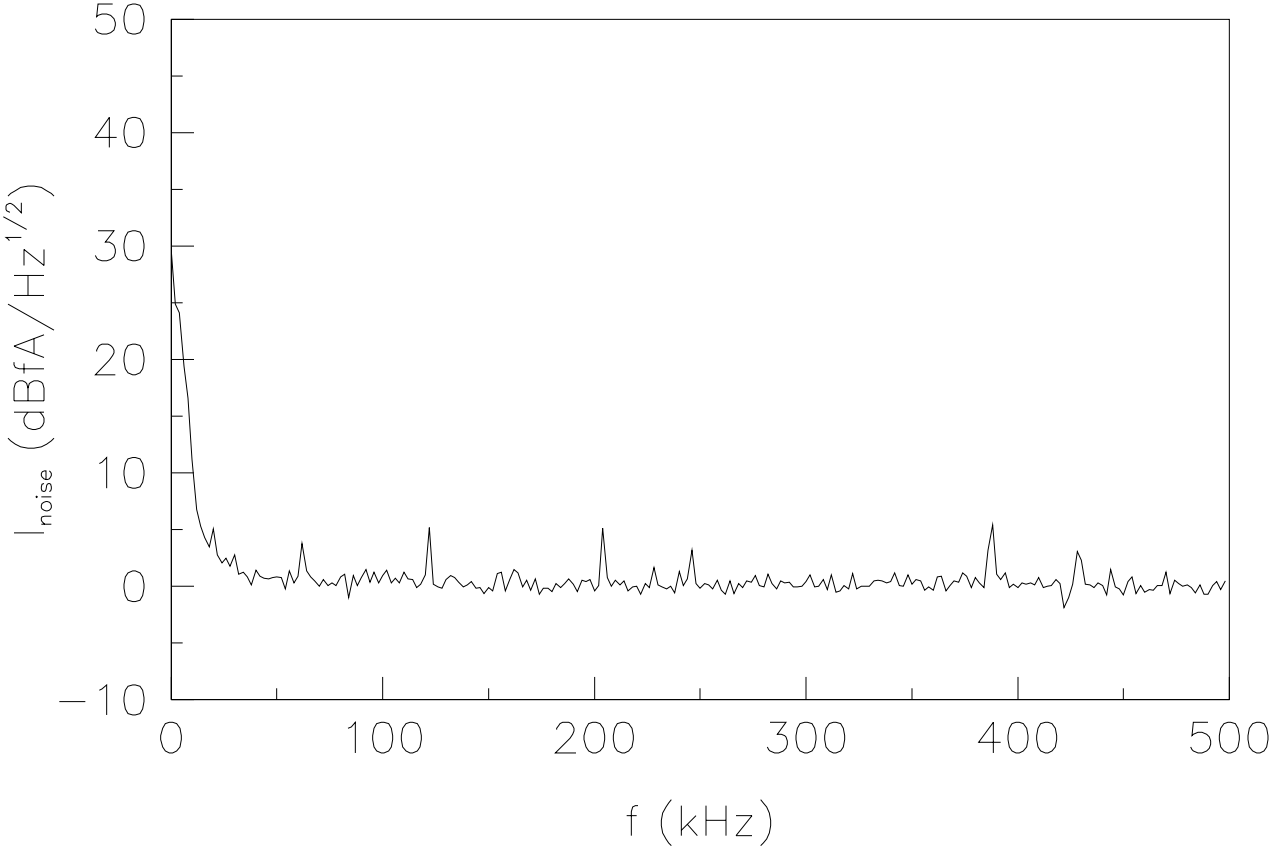
50
40
30
20
10
0
−10
I_{noise} (dBfA/Hz$^{1/2}$)
0
100
200
300
400
500
f (kHz)

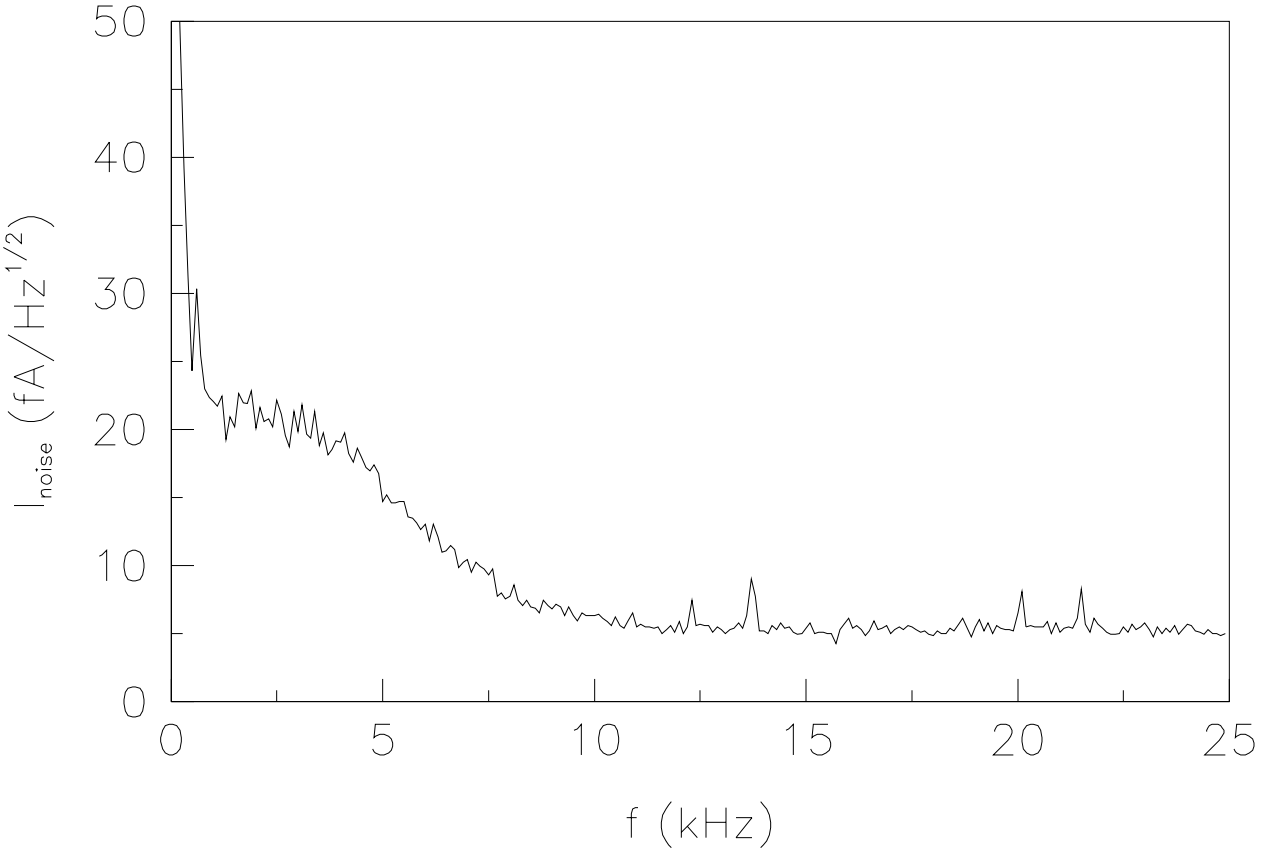
50
40
30
20
10
0
I_{noise} (fA/Hz$^{1/2}$)
0
5
10
15
20
25
f (kHz)

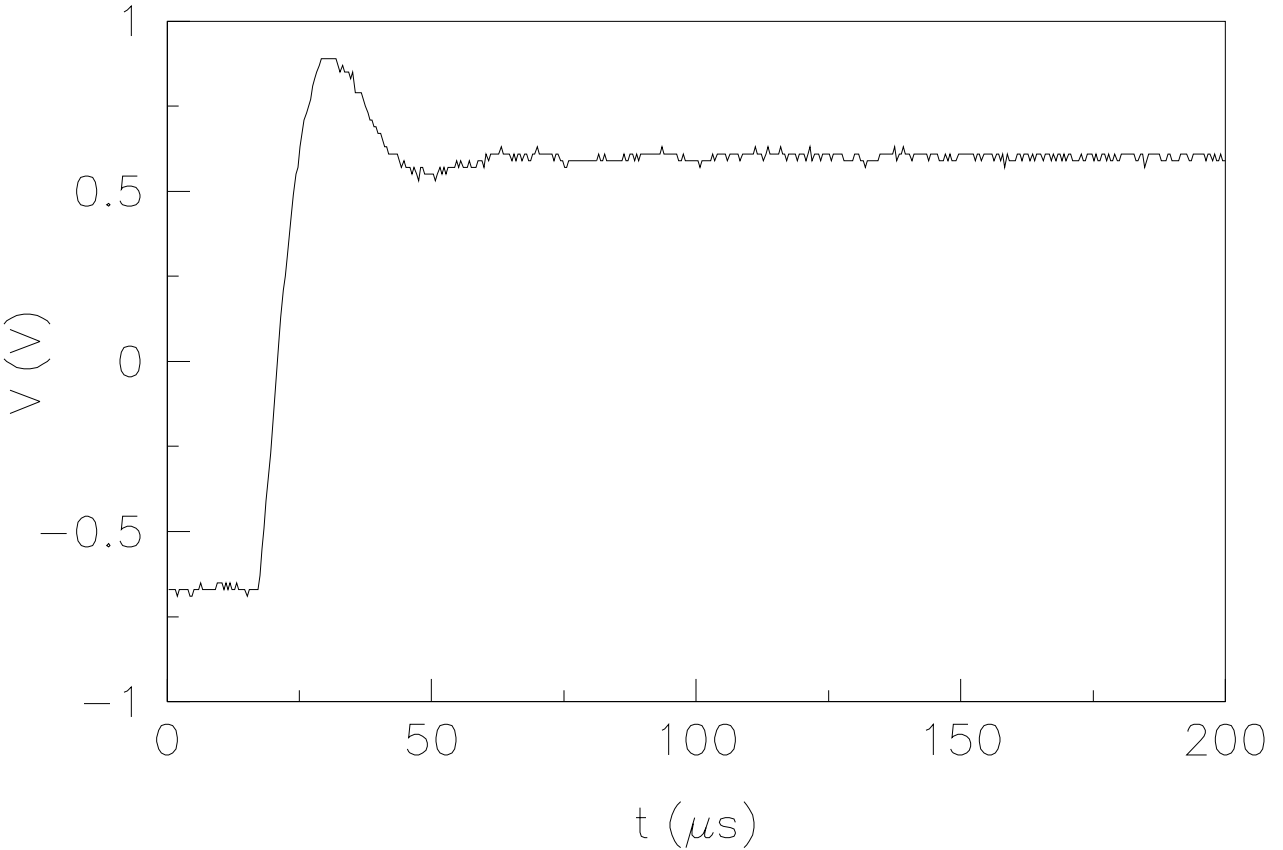
1
0.5
0
−0.5
−1
V (V)
0
50
100
150
200
t (μs)

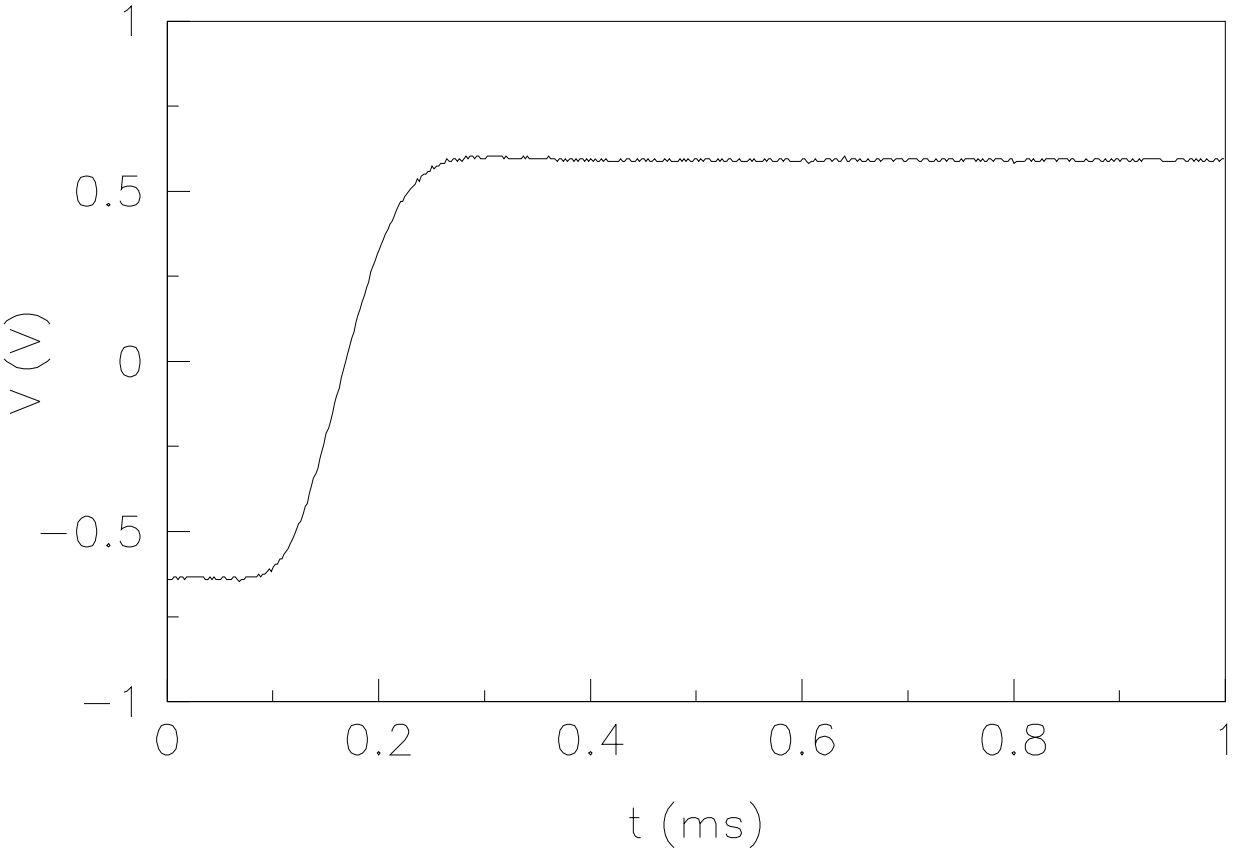
1
0.5
0
−0.5
−1
v (V)
0
0.2
0.4
0.6
0.8
1
t (ms)

1-800-FLANGE1

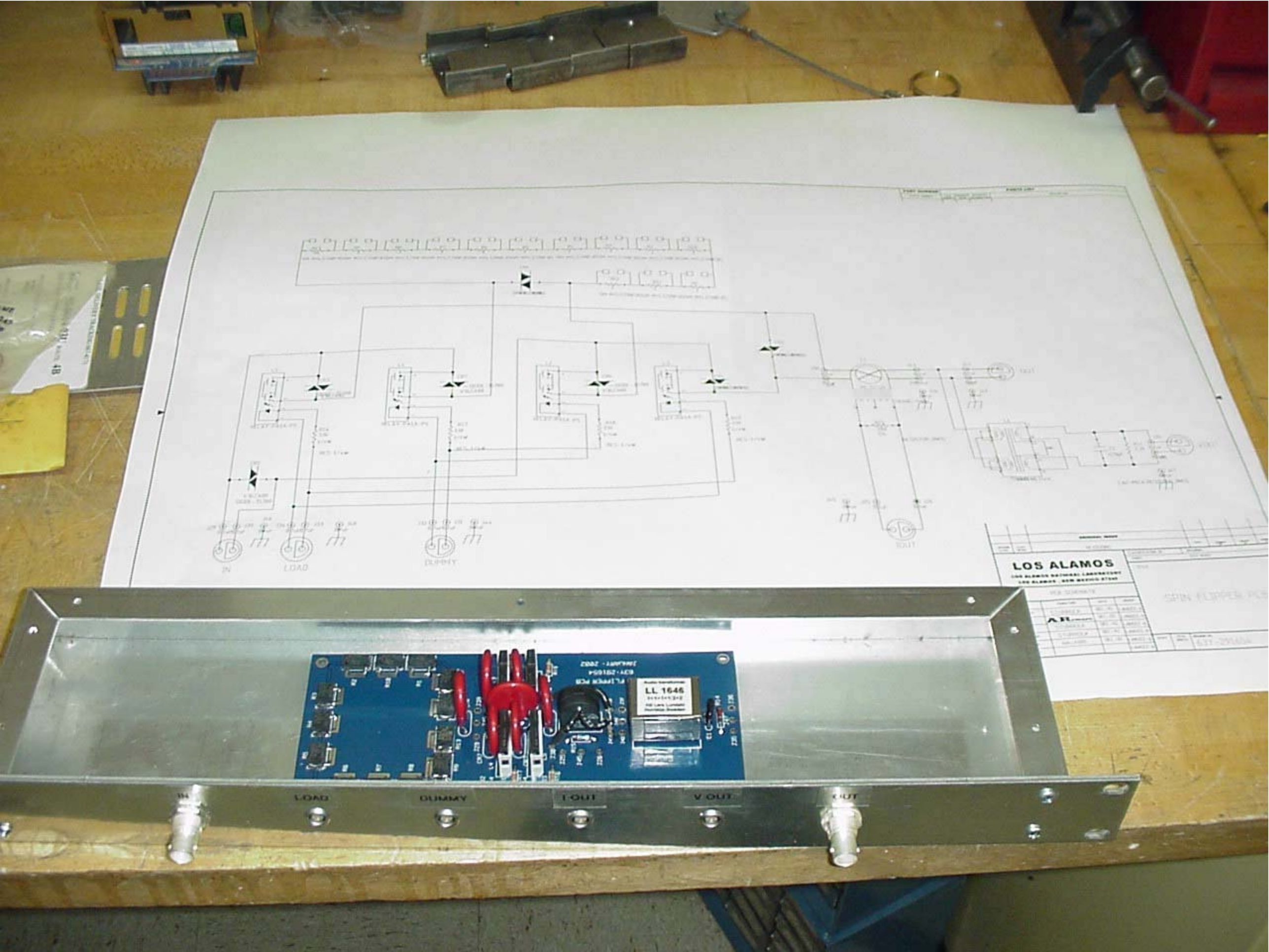
LOS ALAMOS
LL 1646
LOAD
DUMMY
I-OUT
V OUT