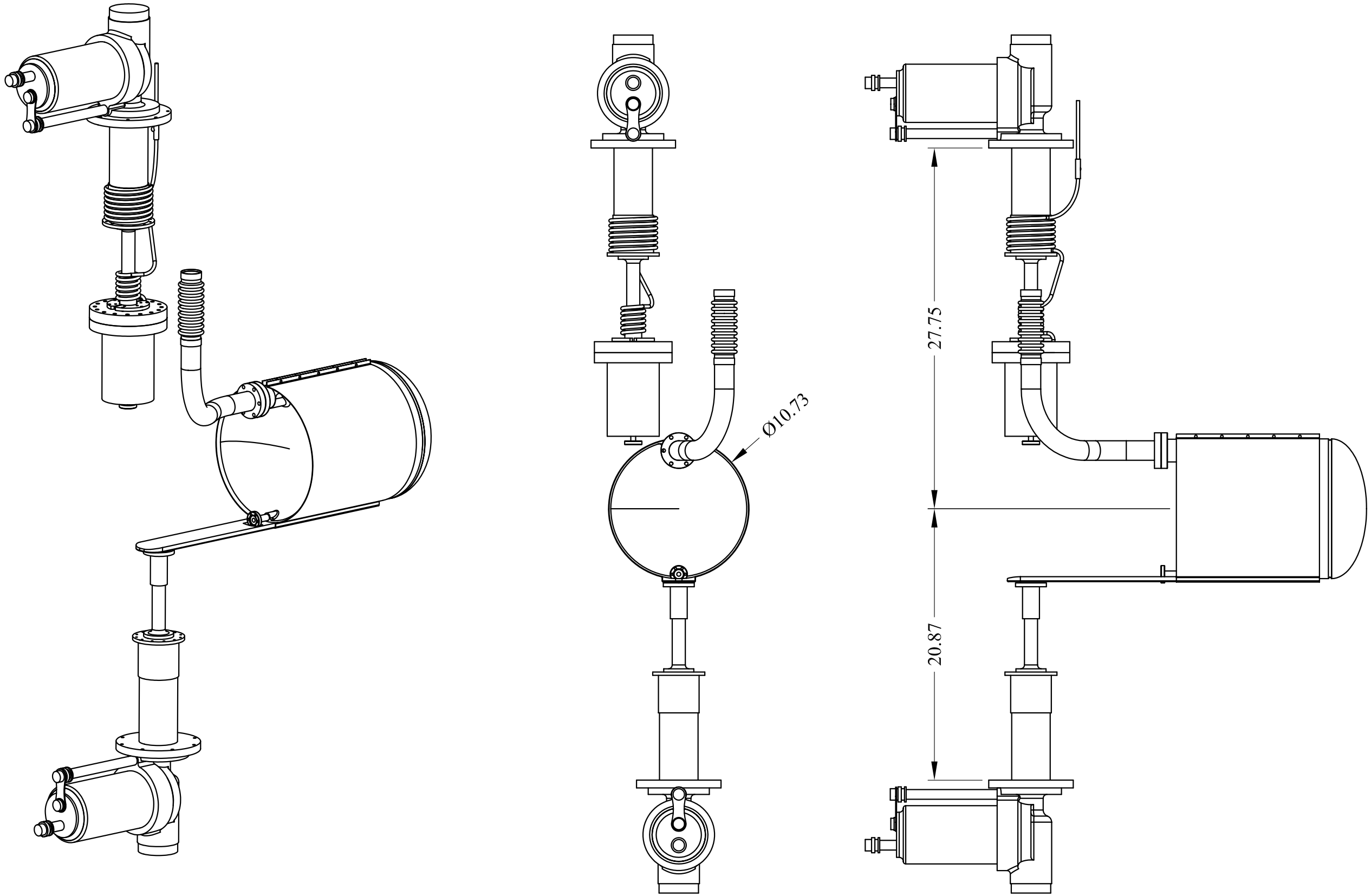

G:\lh2target\box guts.dwg
8-9-02 1:8 Scale