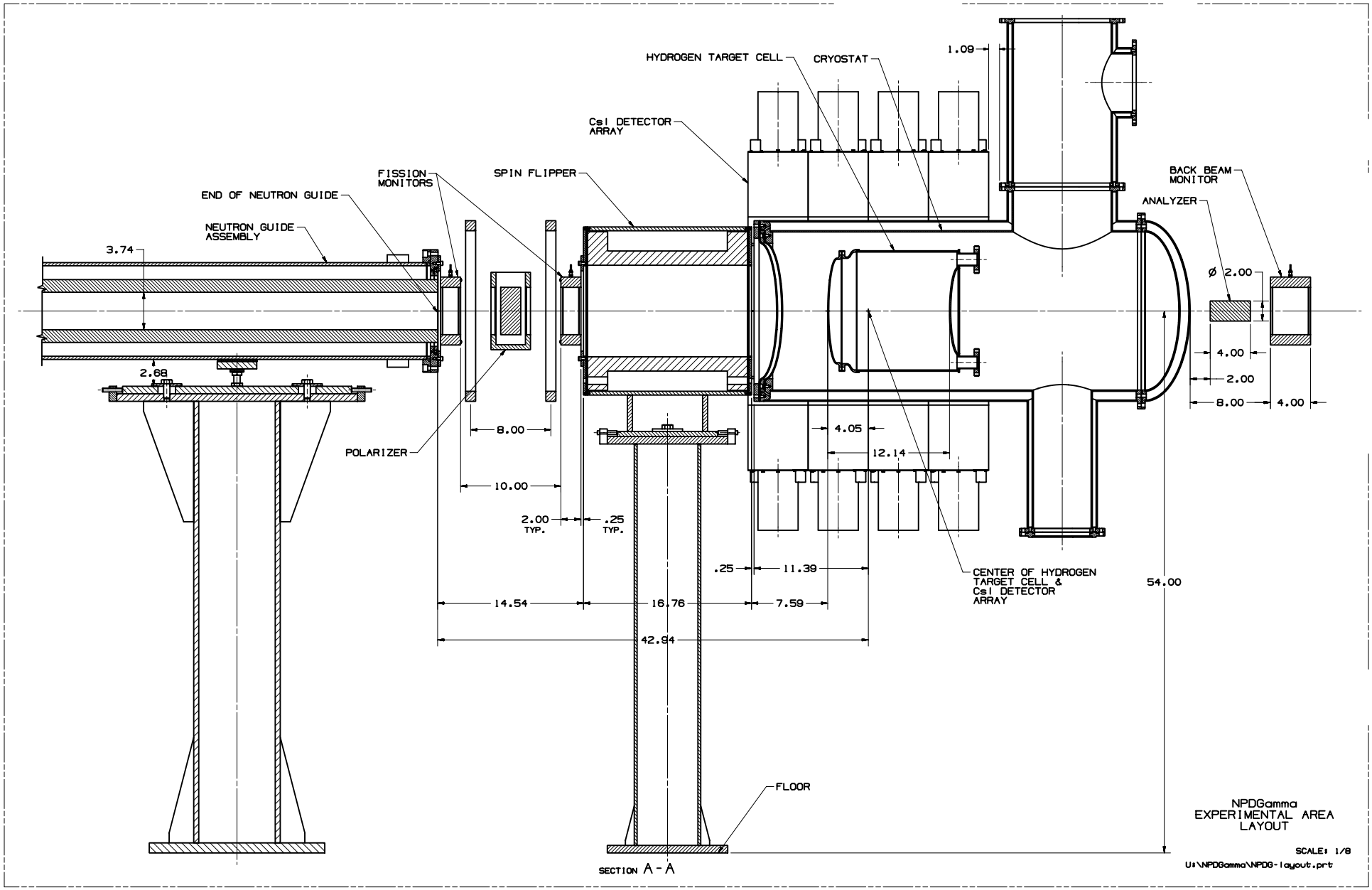
HYDROGEN TARGET CELL
CRYOSTAT
1.09
CsI DETECTOR ARRAY
FISSION MONITORS
SPIN FLIPPER
END OF NEUTRON GUIDE
NEUTRON GUIDE ASSEMBLY
3.74
2.68
BACK BEAM MONITOR
ANALYZER
Ø 2.00
4.00
2.00
8.00
4.00
POLARIZER
8.00
10.00
2.00 TYP.
.25 TYP.
4.05
12.14
.25
11.39
14.54
16.76
7.59
42.94
CENTER OF HYDROGEN TARGET CELL & CsI DETECTOR ARRAY
54.00
FLOOR
SECTION A - A
NPDGamma
EXPERIMENTAL AREA
LAYOUT
SCALE: 1/8
U:\NPDGamma\NPDG-layout.prt