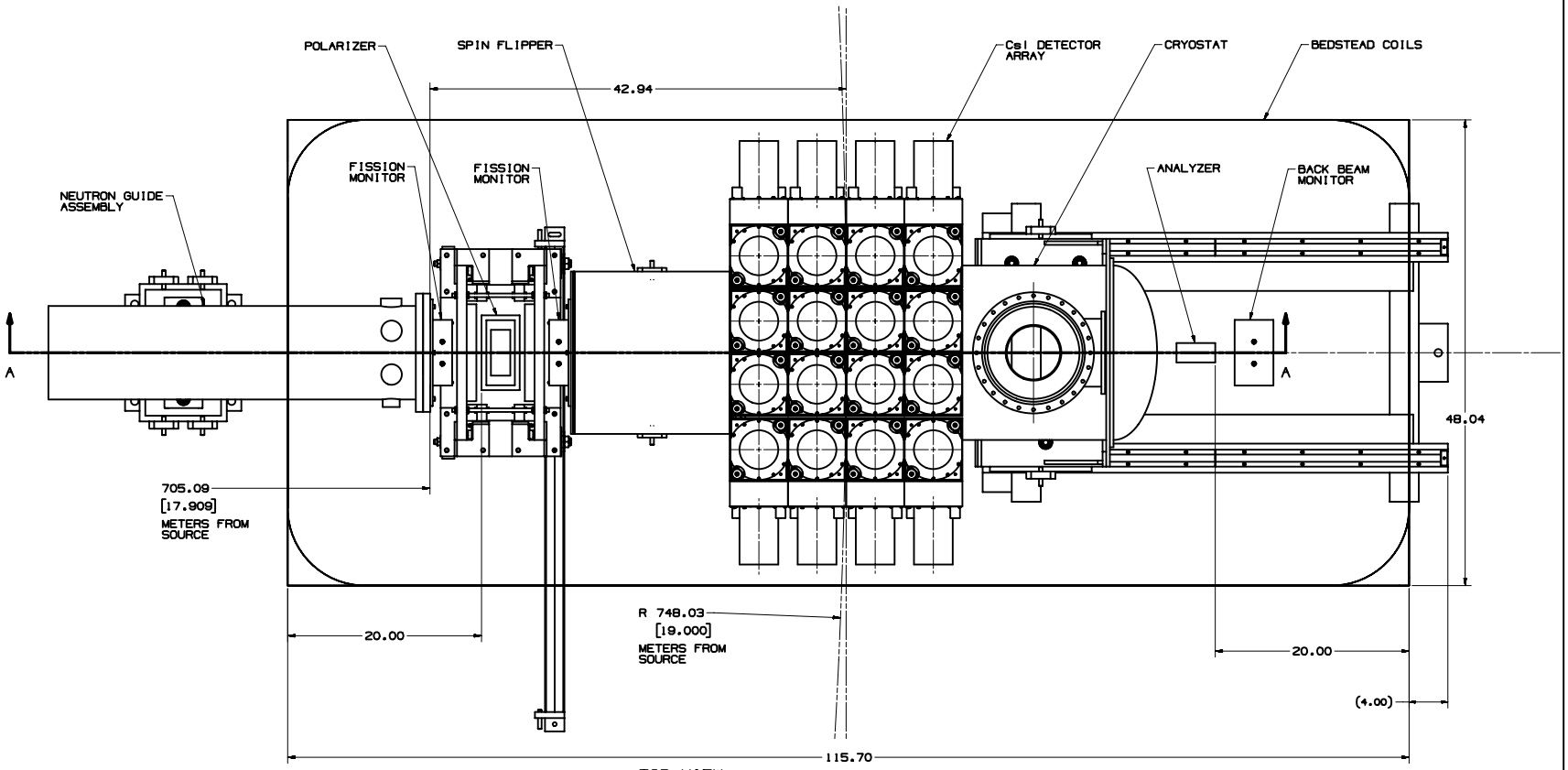

TOP VIEW

NPDGamma
EXPERIMENTAL AREA
LAYOUT

SCALE: 1/4 SHEET 2

U:\NPDGamma\NPDG-layout.prt